卷册检索号 SEARCH NO. OF THE VOLUME
MLHVDC-LCS-ECI-DD-WF-0506 30-B003701S-S0506

第 1 页 共 1 页
PAGE 1 OF 1

图纸文件目录（首页）

CATALOG OF DRAWING DOCUMENTS (HEAD PAGE)

拉合尔±660kV换流站 工程 施工图 阶段
±660kV Lahore Converter Station PROJECT Detail Design DESIGN STAGE

消防 专业 第 05 卷 第 06 册
Fire Fighting SPECIALITY VOLUME BOOK

卷册名称 柴油机消防泵水喷雾灭火系统布置图
Volume name Layout Drawing of Water Spray System for Diesel Fire Pump

批 准 APPROVED BY	
审 核 REVIEWED BY	
设计/勘测 DESIGNED BY/ SURVEYED BY	
图 纸 5 张 DRAWING NOS.	打印件 本 PRINTED COPIES NOS.

序号 No.	图 号 DRAWING NO.	文件名称 DOCUMENT TITLE	版本 EDITION	张 NOS.	本 NOS.	备注 REMARKS
1	30-B003701S-S0506-001	柴油机消防泵水喷雾灭火系统施工说明	A	1		
		Construction Introduction of Water Spray System for Diesel Fire Pump				
2	30-B003701S-S0506-002	柴油消防水泵水喷雾灭火设施平面布置图	A	1		
		Plane Arrangement Drawing of Water Spray System for Diesel Fire Pump				
3	30-B003701S-S0506-003	柴油消防水泵水喷雾灭火系统透视图	A	1		
		Perspective Drawing of Water Spray System for Diesel Fire Pump				
4	30-B003701S-S0506-004	消防管道支架详图	A	1		
		Detail Drawing of Brackets for Fire Fighting Pipelines				
5	30-B003701S-S0506-005	柴油消防水泵水喷雾灭火设施材料表	A	1		
		Bill of Materials for Water Spray System of for Diesel Fire Pump				

注:

1. 本册图采用的主要设计验收规范

1. Design & Acceptance Standards and Codes:

1.1《火力发电厂与变电站设计防火规范》GB50229-2006

1.1《Code for design of fire protection for fossil fuel power plants and substations》GB50229-2006

1.2《消防给水及消火栓系统技术规范》 GB50974-2014

1.2《Technical code for fire protection water supply and hydrant systems》GB50974-2014

1.3《水喷雾灭火系统技术规范》GB50219-2014

1.3《Code for design of water spray extinguishing system》GB50219-2014

1.4 国家建筑标准设计《给水排水标准图集》

1.4 National building standard design "standard collective drawings of water supply and drainage(SCDWSD)" 2.主要设计概况

2. Design Overview

2.1 本册图中A、B坐标为厂区相对坐标，相对坐标的关系式见总图说明。标高单位以m计，尺寸单位以mm计。

2.1 The coordinates A,B is a yard relative coordinates system, of which the conversion formula should see the instructions of the yard general layout drawing. The elevation unit is m, and the size unit is mm.

2.2 本图采用相对标高，地坪标高±0.00相当于EGM2008高程系统193.85m，管道标高均指管中心标高。

2.2 The elevation system of the drawings refers to EGM2008 elevation system, and the elevation of 0.00m in this drawing is equivalent to the absolute elevation of 193.85m. If there are no special notes, the elevation of the fire pipelines represent tube center.

2.4 本册图的设计范围为柴油消防泵及油箱水喷雾灭火系统。消防水泵房图纸见本工程30-B003701S-S0502卷册。水喷雾灭火系统的水源接自消防泵出水母管，管网工作压力为1.00MPa。

2.4 The design of this drawing is the water spray fire extinguishing system of the Diesel Fire Pump and diesel tank. The drawing of fire pump house refers to volume of 30-B003701S-S0502. Water source of water spray fire extinguishing system is from the main pipes of the fire pipe network. The working pressure of the pipe network is 1.00MPa.

2.5 柴油消防泵及油箱水喷雾系统的设计强度为：20L/min.m^2。

2.5 The design strength of the water spray system of the Diesel Fire Pump and diesel tank is 20L/min.m^2.

2.6. 水雾喷头的布置以喷出的水能覆盖整个被保护物外表面为原则。水喷雾系统安装完毕后应进行喷水试验，同时调整喷头角度，保证均匀覆盖被保护物后固定喷头角度。被保护对象带电或运行时不得进行试验。

2.6 The layout of the spray nozzle is based on the principle that the sprayed water can cover the entire surface of the protected object. Water spray test should be carried out after the installation of water spray system. At the same time, the angle of the nozzle is adjusted to ensure that the angle of the nozzle is fixed evenly covering the protected object. No test shall be carried out when the protected object is charged or running.

2.7 水喷雾灭火系统的施工和安装必须符合国家有关规范的要求，并按《消防给水及消火栓系统技术规范》 GB50974-2014及《水喷雾灭火系统技术规范》GB50219-2014的要求验收。

2.7 System construction and installation must comply with the relevant requirements of the national standard of water spray, and Code for "Technical code for fire protection water supply and hydrant systems"GB50974-2014 and "Code for water spray extinguishing system technical specifications" (GB50219-2014) approval requirements.

2.8 水喷雾灭火系统应定期检查试验，发现问题及时解决，以免火灾时失去作用。

2.8 The water spray fire extinguishing system should check the test regularly to find out the problem in time so as to avoid to loss of the effect.

2.9 本册图中所有设备、材料选用的工作压力等级均要求为1.6MPa或以上。雨淋阀组和阀门等设置位置，应设置永久性固定标识。

2.9 The work pressure grade for all equipment and materials in this drawing is 1.6MPa or above. Permanent fixed signs should be set for the setting of the deluge valves and valves.

3. 设备选型 3. Equipment Selection

3.1 本工程所选的雨淋阀组、喷头及其它消防专用材料等均应取得国家消防强制认证cccf方可使用。产品必须经国家消防产品质量监督检测中心检测，并符合有关现行的国家标准。柴油机消防泵及油箱水喷雾系统中设备安装、维护等技术要求均由供货单位提供，并由其负责安装指导及调试开通。水喷雾喷头根据广东胜捷消防科技有限公司所供样本手册选型（合同已定）

3.1 The deluge valve, nozzles and other special fire-fighting materials selected by this project shall be approved by the China fire control certification CCCF. The product must be tested by the national fire products quality supervision and detection center and accordance with the current national standards.The equipment installation, maintenance and other technical requirements in the water spray system are provided by the suppliers, who are responsible for installation guidance and commissioning.The spray water system is designed by referring to sample handbook of Guangdong Shengjie Fire-Protection Technology Co.,Ltd（the contract has been set）.

3.2 喷头选用高速离心雾化型水雾喷头，喷头应带柱状过滤网。Y型过滤器的滤网应采用耐腐蚀金属材料，其网孔基本尺寸应为0.600mm~0.710mm。

3.2 The high speed centrifugal atomizing spray nozzles are selected, and the nozzles should be with a columnar filter.The filter screen of the Y filter should be corrosion-resistant metal, and its mesh size should be 0.600mm~0.710mm.

3.3 普通通用阀门应选用明杆闸阀或带启闭刻度的暗杆闸阀，材质为球墨铸铁。

3.3 The general valves should choose the bright rod valve or the dark rod valve with the open and closed scale, which is made of spheroidal graphite cast iron.

4. 管道及喷头安装

4. Installation of pipes and sprinklers

4.1 本册图中消防管道均采用内外热浸镀锌钢管。DN50及以下管径的管道及阀门采用螺纹连接；DN50管径以上的管道及阀门采用刚性沟槽（卡箍）或法兰连接，材料表按卡箍连接方式开列。如采用法兰连接，必须二次镀锌。所选刚性沟槽也应具有3C认证。DN250直立干管应采用法兰连接。

4.1 Both internal and external hot-dip galvanized steel pipes are used in the fire-fighting pipes of this volume. The pipes and the valves of which diameter are less than or equal to 50mm are connected by screwed joint. The pipes and the valves of which diameter are greater than 50mm are connected by rigid grooves (clamps) or flange connections. The material bills are arranged according to the clamp connection mode.If the flange connection is used, it must be galvanized two times.The selected rigid grooves should also have 3C authentication.The DN250 erect pipe should be connected by flange.

4.2 在安装管道前要检查每一根管道，防止任何杂物进入系统管网；在安装喷头前，还必须对报警控制阀后管道清洗干净，确保无杂物堵塞喷头影响系统正常工作。冲洗量、流速等冲洗要求见相关施工验收规范。

4.2 Check every pipe before installing the pipe to prevent any sundries entering the system pipe network；Before installing the sprinkler, it is necessary to clean the pipe which after the alarm control valve so as to ensure that no sundries plug the nozzle and affect the normal work of the system.The washing capacity, flow rate and other flushing requirements are seen in the relevant construction acceptance criteria.

4.3 管道应进行水压试验，工作压力为1.00MPa，试验压力为1.60MPa。具体试验要求见相关施工验收规范。

4.3 The water pressure test should be carried out in the pipeline, the working pressure is 1.00MPa, and the test pressure is 1.60MPa. Specific test requirements are required to see the relevant construction acceptance criteria.

4.4 本册图中所有消防钢管安装时均须进行防腐并涂公安红面漆处理。水喷雾管道加涂色环。具体防腐涂料涂装方案见本工程S0502卷册。钢管安装时，应注意防止损环镀锌和防腐层。

4.4 All the fire-fighting pipes in this volume shall be protected and coated with police red lacquer.Water spray pipes should be printed color ring.The application of specific anticorrosive coatings are shown in the S0502 volume of the project.When the steel pipe is installed, we should pay attention to prevent the damage of galvanizing and anticorrosion layer.

4.5 管道穿楼板、墙壁应安装套管,套管高出楼层地坪5-10cm,管道与套管间的空隙用防火材料封堵并做好防水。具体做法可参照给水排水标准图集S4。

4.5 The pipes should be mounted on the floor or wall, and the casing is high out of the floor 5-10cm.The gap between pipes and casing should be blocked by fireproof and waterproof material, which can refer to ARCHLIB S4.

4.6 当管道穿过防火墙时，管道与防火墙之间的缝隙应采用防火材料堵塞。当直径大于等于32mm的管道穿过防火墙时，除填塞防火材料外，还应采取阻火排施。排施包括采用阻火圈或阻火带并辅以加防火泥或防火防封胶的有机堵料等封堵。

4.6 When the pipe passes through the firewall, the gap between the pipe and the firewall should be blocked by fireproof material.When the pipes with diameter greater than or equal to 32mm pass through the firewalls, fire prevention measures should be taken in addition to filling the fireproof material. Fire prevention measures include using a fire ring or a fire belt and supplemented with organic plugging such as fireproof mud or fire sealant.

4.7 管道、喷头若与其它设施发生碰撞,可作适当调整但必须符合规范要求。

4.7 If a pipe or a nozzle collides with other facilities, it can be adjusted properly but must meet the requirements of the specification.

4.8 在配水干管、支干管及支管上严禁采用补芯。

4.8 Buxing is strictly prohibited on the water distribution pipes, the sub-main pipes and the branch pipes.

4.9 所有管道和喷嘴都能够通过最低层的喷嘴放空，雨淋阀组至水喷雾环网的管道以i=0.004坡度坡向放水点。每次水喷雾后均应进行放空。

4.9 All pipes and nozzles can be emptied at the lowest level of the nozzles. The pipes between the deluge valves and the water spray ring network takes the slope of the i=0.004 slope to the discharge point. Each water spray should be emptied after each use.

4.10 系统中的管道、喷头及支架等均应接地。具体图纸及接地电阻等详见电气专业图纸。

4.10 In the water spray system, the grounding should be designed for pipes, nozzles and brackets. Grounding design and grounding resistance are detailed in electrical drawings.

4.11 为便于设备检修能施离，本系统中的管道均设有法兰连接或刚性沟槽卡箍，可以拆卸。装喷头处的管道螺纹必须按照到货的水喷头实际尺寸进行加工。

4.11 In order to facilitate the evacuation of the equipment, the pipe in this system has flange connection or rigid groove clamp, which can be dismantled. The pipe thread at the nozzles must be processed according to the actual size of the delivered water sprinklers.

5. 支吊架安装

5. Suspension and support

5.1 环形供水管的支架安装应根据本卷册相应水喷雾灭火系统管道及喷头透视图的指引，参见本卷册相关支架图纸及《给水排水标准图集》03S402。

5.1 The installation of the support for the looped water network shall be guided according to the guidance map of perspective drawings of the corresponding water spray fire extinguishing system, and see the relevant detail drawings of brackets and ARCHLIB 03S402.

5.2 在环形供水管上，向上、向下或悬臂引伸的支管如长度超过800mm的均应设支撑，其支撑方式可由原支架延长或据现场实际情况确定。

5.2 On the looped pipe network, a branch pipe extending upward, downward or cantilevers, if the length is over 800mm, shall be provided with support. The supporting mode can be extended from the original support or determined according to the actual situation of the site.

5.3 所有管道支吊架均应进行防腐处理，具体处理方法见图集或同管道，如焊接破坏镀锌处须补涂锌加涂料。

5.3 All pipe support hangers should be treated for anticorrosion. The specific treatment methods refer to atlas or method of the pipes, such as zinc and coating for galvanizing of welding damage.

6. 系统控制

6. System control

6.1 水喷雾灭火系统应设有自动控制、手动控制和应急操作三种控制方式。火灾探测器类型选用缆式线型感温，详见电气专业图纸。在发生火灾，探测器信号动作后，可自动启用雨淋阀组进行水喷雾灭火，也可采用人工手动控制及应急操作的方式。

6.1 Water spray fire extinguishing system should be equipped with three kinds of control methods: automatic control, manual control and emergency operation.The type of fire detector uses cable type temperature sensing, and it is detailed in electrical drawings.After fire and detector signal action, it can automatically activate the deluge valves for water spray fire extinguishing, or manual control and emergency operation.

6.2 在雨淋阀本体上设有紧急机械启动装置，并应采取安全保护措施，由专人负责,以免发生误操作，造成不必要的损失。

6.2 An emergency mechanical starting device shall be installed on the body of the shower valve, and safety protection measures shall be taken by the special person responsible for it, so as to avoid misoperation and cause unnecessary losses.

7. 本系统工作原理如下：

7. The working principle of this system is as follows:

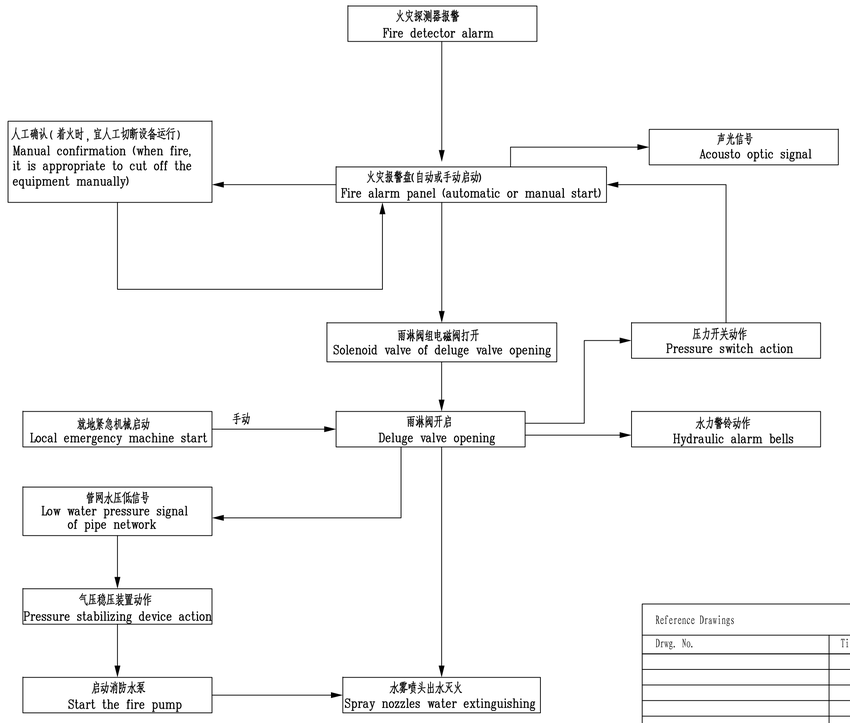

图例：

Legend:

大小头	Reducer	◁
法兰片	Flange	||
喷头编号	Nozzle Number	P01
支架编号	Bracket Number	Z01
消防水管道	Fire Pipings	———
水雾喷头	Spray Nozzles	◁ ●
管道支架	Pipe Brackets	⊕ X

Reference Drawings

Drwg. No.	Title

Revisions

	Name	Date	Notes

巴基斯坦默蒂亚里—拉合尔±660kV直流输电工程

±660kV HVDC Project from Matiari to Lahore in Pakistan

NATIONAL TRANSMISSION & DESPATCH COMPANY (NTDC) LIMITED PAKISTAN

CONTRACTOR 国家电网 STATE GRID 中国电力技术装备有限公司 CHINA ELECTRIC POWER EQUIPMENT AND TECHNOLOGY CO.,LTD.

SUBCONTRACTOR East China Electric Power Design Institute Co.,Ltd.

拉合尔±660kV换流站

±660kV Lahore Converter Station

设计阶段 PHASE：施工图 Detail Design

M L H V D C - L C S - E C I - D D - W F - 0 5 0 6 - 0 0 1 A

	姓名 Name	日期 Date
设计 Designed	崔林林	2019.5.12
校核 Checked	梁涛	2019.5.13
审核 Reviewed	金新晓	2019.5.13
批准 Approved	[illegible]	2019.5.13
比例 Scale	NTS	图号 DWG NO. 30-B003701S-S0506-001

柴油机消防泵水喷雾灭火系统施工说明

Construction Introduction of Water Spray System for Diesel Fire Pump

版本 REV. A

A1(841x594)

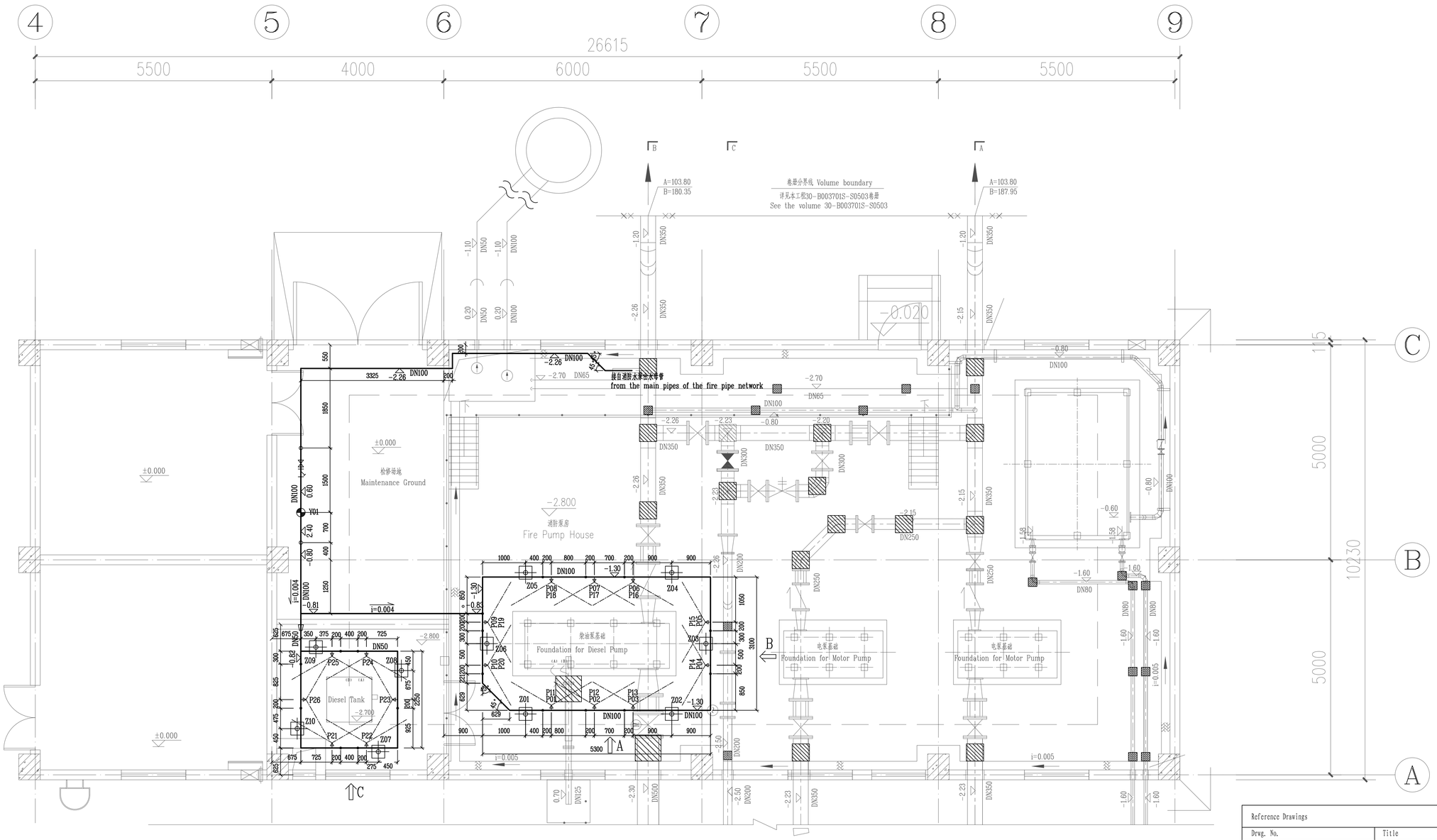

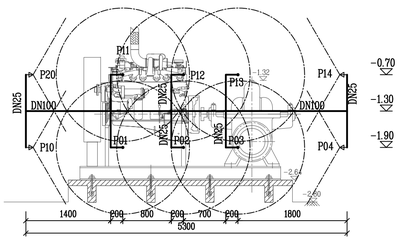

A向视图
A Direction View

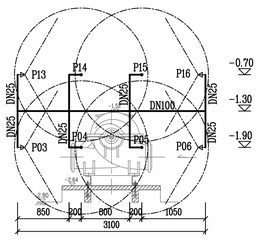

B向视图
B Direction View

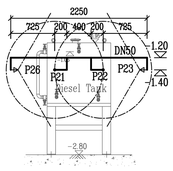

C向视图
C Direction View

Reference Drawings

Drwg. No.	Title

Revisions

	Name	Date	Notes

巴基斯坦默蒂亚里—拉合尔±660kV直流输电工程
±660kV HVDC Project from Matiari to Lahore in Pakistan

NATIONAL TRANSMISSION & DESPATCH COMPANY (NTDC) LIMITED PAKISTAN

CONTRACTOR 国家电网 STATE GRID 中国电力技术装备有限公司 CHINA ELECTRIC EQUIPMENT GROUP CORPORATION CO.,LTD.

SUBCONTRACTOR East China Electric Power Design Institute Co.,Ltd.

拉合尔±660kV换流站
±660kV Lahore Converter Station

设计阶段 PHASE: 施工图 Detail Design

M L H V D C - L C S - E C I - D D - W F - 0 5 0 6 - 0 0 2 A

	姓名 Name	日期 Date
设计 Designed	崔林林	2019.5.12
校核 Checked	梁涵	2019.5.13
审核 Reviewed	金新晓	2019.5.13
批准 Approved	孙晓亚	2019.5.13
比例 Scale	1:50	

柴油消防水泵水喷雾灭火设施平面布置图
Plane Arrangement Drawing of Water Spray System for Diesel Fire Pump

图号 DWG NO. 30-B003701S-S0506-002

版本 REV. A

A1(841x594)

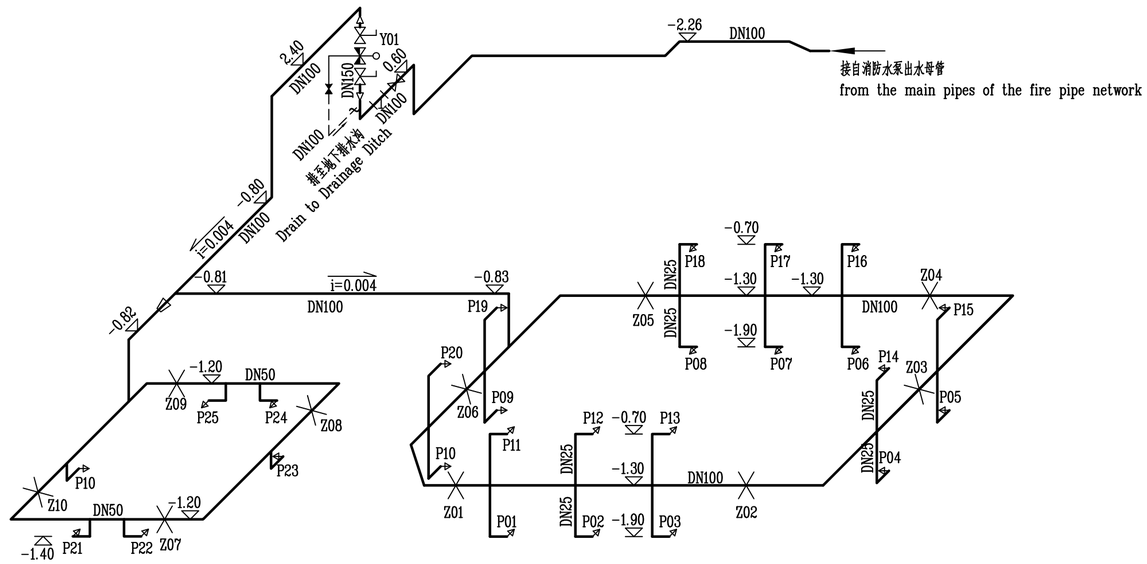

水喷雾系统参数表:

Parameters of the water spray fire extinguishing system:

型号 Parameters	K	喷头编号 No.	数量 Quan.	当0.35MPa时水雾喷头的流量Flow（L/min）	水雾喷头保护部位面积Area（m^2）	喷射强度Intensity （L/min.m^2）
ZSTWB-16-120	16	P01~P20	20只	$20x16x\sqrt{10x0.35}$=598.67(L/min)	柴油机消防水泵 Diesel Firefighting Pump: 24.78	24.16 L/min.m^2
ZSTWB-16-120	16	P21~P26	6只	$6x16x\sqrt{10x0.35}$=179.60(L/min)	柴油机消防水泵油箱 Diesel Tank 5.51	32.60 L/min.m^2
水喷雾系统的流量Flow		ΣQ=598.67(L/min)+179.60(L/min)=12.97(L/S)				
水喷雾系统的响应时间Time(s)		T=t1+t2=16(s)				

Reference Drawings

Drwg. No.	Title

Revisions

	Name	Date	Notes

巴基斯坦默蒂亚里—拉合尔±660kV直流输电工程

±660kV HVDC Project from Matiari to Lahore in Pakistan

NATIONAL TRANSMISSION & DESPATCH COMPANY (NTDC) LIMITED PAKISTAN

CONTRACTOR 国家电网 STATE GRID 中国电力技术装备有限公司 CHINA ELECTRIC POWER EQUIPMENT AND TECHNOLOGY CO.,LTD.

SUBCONTRACTOR East China Electric Power Design Institute Co.,Ltd.

拉合尔±660kV换流站

±660kV Lahore Converter Station

设计阶段 PHASE: 施工图 Detail Design

M L H V D C - L C S - E C I - D D - W F - 0 5 0 6 - 0 0 3 A

	姓名 Name	日期 Date
设计 Designed	唐林林	2019.5.12
校核 Checked	黄斌	2019.5.13
审核 Reviewed	金新锐	2019.5.13
批准 Approved	王福平	2019.5.13

柴油消防水泵水喷雾灭火系统透视图

Perspective Drawing of Water Spray System for Diesel Fire Pump

比例 Scale	NTS	图号 DWG NO.	30-B003701S-S0506-003	版本 REV.	A

A2(594x420)

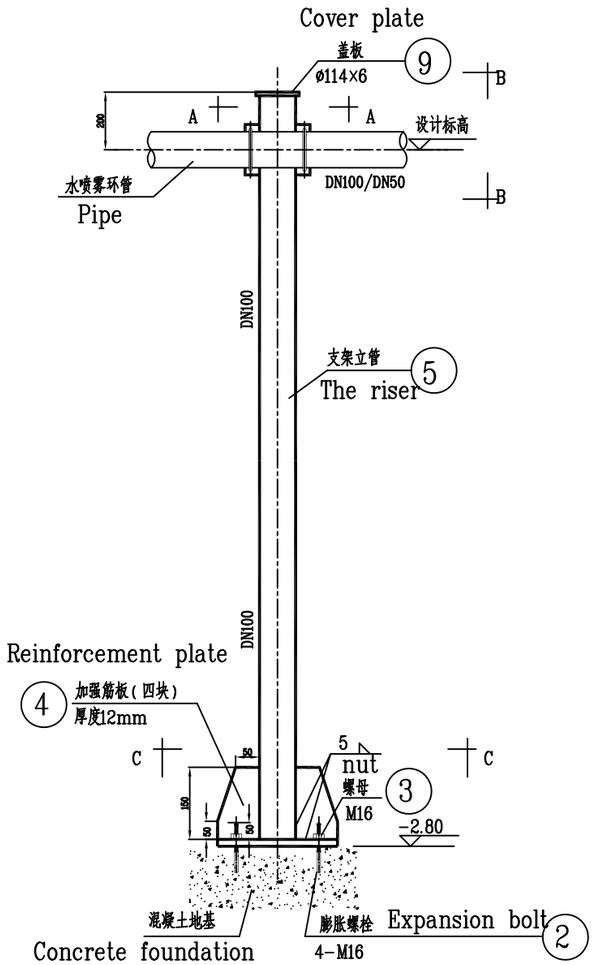

支架详图

Support Detail

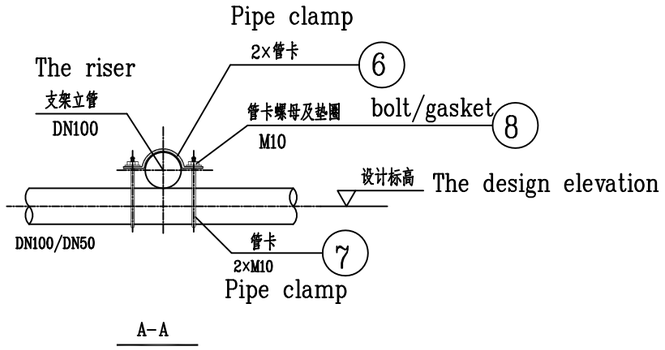

A-A

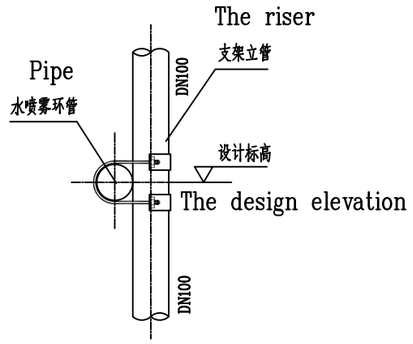

B-B

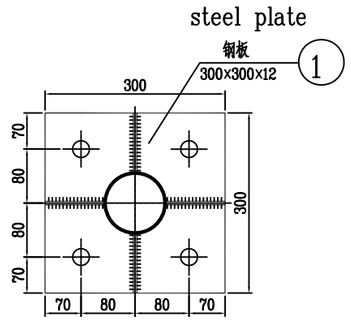

C-C

单套支架材料表　A set of supporting materials

No. 编号	名　称 Name	Parameters 规　格	Unit 单位	Quan. 数　量	Material 材　料	Remark 参考图号及备注
9	Cover plate 盖板	ø114×6	个 set	1	Q235A	
8	bolt/gasket 管卡螺母及垫圈	M10	套 set	8	Q235A	
7	Pipe clamp 管卡	M10	根 set	2	Q235A	
6	Pipe clamp 管卡		根 set	2	Q235A	
5	Galvanized steel pipe镀锌钢管	DN100	米 m	1.8 1.7	Q235A	42套2.7m,8套1.9m 42 sets of 2.7m, 8 sets of 1.9m
4	Reinforcement plate 加强筋板	150×93×12	块 block	4	Q235A	
3	nut 螺母	配套M16螺栓	个 set	4	不锈钢 Stainless steel	
2	Expansion bolt 膨胀螺栓	HST-RM16x140/25	根 set	4	不锈钢 Stainless steel	
1	steel plate 钢板	300×300×12	块 block	1	Q235A	

Reference Drawings

Drwg. No.	Title

Revisions

	Name	Date	Notes

巴基斯坦默蒂亚里—拉合尔±660kV直流输电工程

±660kV HVDC Project from Matiari to Lahore in Pakistan

NATIONAL TRANSMISSION & DESPATCH COMPANY (NTDC) LIMITED PAKISTAN

CONTRACTOR 国家电网 STATE GRID 中国电力技术装备有限公司 CHINA ELECTRIC POWER EQUIPMENT AND TECHNOLOGY CO.,LTD.

SUBCONTRACTOR East China Electric Power Design Institute Co.,Ltd.

拉合尔±660kV换流站

±660kV Lahore Converter Station

设计阶段 PHASE: 施工图 Detail Design

M L H V D C - L C S - E C I - D D - W F - 0 5 0 6 - 0 0 4 A

	姓名 Name	日期 Date
设计 Designed	崔林林	2019.5.12
校核 Checked	黄斌	2019.5.13
审核 Reviewed	金新民	2019.5.13
批准 Approved	杨亚	2019.5.13
比例 Scale		图号 DWG NO.

消防管道支架详图

Detail Drawing of Brackets for Fire Fighting Pipelines

30-B003701S-S0506-004

版本 REV. A

A3(420x297)

备注:
Notes:
1. 管道连接件(卡箍或法兰片)及其它管件不足部分或现场临时打弯管件计入管长。
1. The connection fitting(clamps or flanges), insufficient part or the temporary elbow fitting are included in length of pipes.
2、管径小于DN50的弯头、三通、大小头等管件均计入管长,不另外开列。
2. The pipe fittings(including elbow/ Tee joint and Reducer)which pipe diameter is smaller than DN50 are included in length of pipes.

编号 No.	名称 Name	规格 Parameters	单位 Unit	数量 Quan	材料 Material	单重 Single 重量(公斤)	总重 Totoal Weight(Kg)	参考图号及备注 Remark
18	管道支吊架		只	8				见图集03S402
	Pipe supports and hangers							SCDWSD:03S402
17	管道支吊架		套	10				见图04
	Pipe supports and hangers		Set					see Drawing 04
16	大小头	DN100/DN50 PN=1.6MPa	只	3				含卡箍或法兰等连接配件
	Reducer		Set					including connection fittings, such as clamps or flange etc.
15	大小头	DN150/DN100 PN=1.6MPa	只	2				含卡箍或法兰等连接配件
	Reducer		Set					including connection fittings, such as clamps or flange etc.
14	三通	DN100 PN=1.6MPa	只	3				含卡箍或法兰等连接配件
	three Tee		Set					including connection fittings, such as clamps or flange etc.
13	异径四通	DN100/DN25 PN=1.6MPa	只	7				含卡箍或法兰等连接配件
	Reducing four Tee		Set					including connection fittings, such as clamps or flange etc.
12	45°弯头	DN100 PN=1.6MPa	只	4				含卡箍或法兰等连接配件
	45°elbow							including connection fittings, such as clamps or flange etc.
11	90°弯头	DN100 PN=1.6MPa	只	10				含卡箍或法兰等连接配件
	90°elbow							including connection fittings, such as clamps or flange etc.
10	钢管(内外热镀锌)	D26.9×3.2(DN25),PN=1.6MPa	米	25	Q235B			GB/T 3091-2015, 含卡箍或法兰等连接件、弯头、三通等管配件
	Steel pipe (inside and outside	hot-dip galvanizing)	m		GB/T 3091-2015, including pipe fittings, such as connection(flanges or clamps, elbow, tee etc.			
9	钢管(内外热镀锌)	D60.3×4(DN50),PN=1.6MPa	米	12	Q235B			GB/T 3091-2015, 含卡箍或法兰等连接件、弯头、三通等管配件
	Steel pipe (inside and outside	hot-dip galvanizing)	m		GB/T 3091-2015, including pipe fittings, such as connection(flanges or clamps, elbow, tee etc.			
8	钢管(内外热镀锌)	D114.3×4(DN100),PN=1.6MPa	米	50	Q235B			GB/T 21835-2008, 含卡箍或法兰等连接配件
	Steel pipe (inside and outside	hot-dip galvanizing)	m		GB/T 21835-2008, including connection fittings, such as clamps or flange etc.			
7	钢制法兰片	DN100 PN=1.6MPa	片	4	Q235B			GB/T9119-2010 包括螺帽、螺栓等
	Steel Flanges		Set					GB/T9119-2010,including nuts, bolts and so on
6	高速水雾喷头	ZSTWB-16-120 K=16	套	26				参照广东胜捷消防科技有限公司样本手册选型(合同已定)
	High speed water spray nozzle		Set		Refer to sample handbook of Guangdong Shengjie Fire-Protection Technology Co.,Ltd (The contract has been set)			
5	闸阀	DN100, PN=1.6MPa	套	1				
	Gate valve		Set					
4	Y型过滤器	DN100 PN=1.6MPa	套	1				
	Filter		Set					
3	信号蝶阀	DN150, PN=1.6MPa	套	2				
	Signal butterfly valve		Set					
2	就地控制盘		套	1				
	Local control panel		Set					
1	雨淋阀组	ZSFM150(DN150)	套	1				配反法兰
	Deluge valve		Set					With the flange (The contract has been set)

Reference Drawings

Drwg. No.	Title

Revisions

	Name	Date	Notes

巴基斯坦默蒂亚里—拉合尔±660kV直流输电工程
±660kV HVDC Project from Matiari to Lahore in Pakistan

NATIONAL TRANSMISSION & DESPATCH COMPANY (NTDC) LIMITED PAKISTAN

CONTRACTOR 国家电网 STATE GRID 中国电力技术装备有限公司 CHINA ELECTRIC POWER EQUIPMENT AND TECHNOLOGY CO.,LTD.

SUBCONTRACTOR East China Electric Power Design Institute Co.,Ltd.

拉合尔±660kV换流站
±660kV Lahore Converter Station

设计阶段 PHASE: 施工图 Detail Design

M L H V D C - L C S - E C I - D D - W F - 0 5 0 6 - 0 0 5 A

	姓名 Name	日期 Date
设计 Designed	崔林林	2019.5.12
校核 Checked	窦斌	2019.5.13
审核 Reviewed	金新锐	2019.5.13
批准 Approved	[illegible]	2019.5.13

柴油消防水泵水喷雾灭火设施材料表
Bill of Materials for Water Spray System of for Diesel Fire Pump

比例 Scale: NTS
图号 DWG NO.: 30-B003701S-S0506-005
版本 REV.: A

A2(594x420)